更改 REV	變更內容 MODIFICATION
A	ECXXXXX

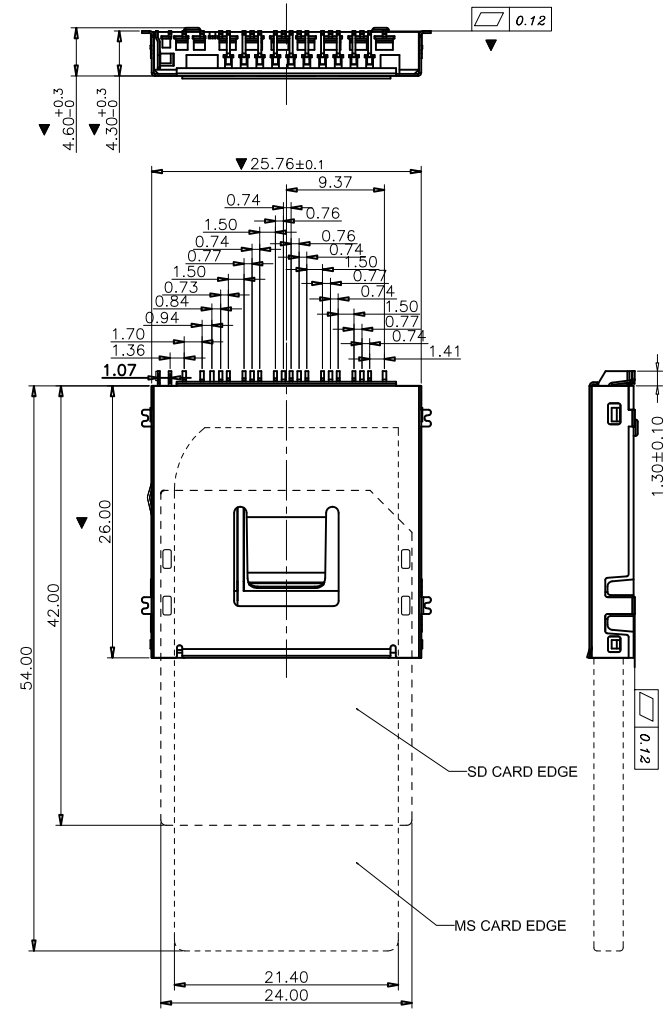

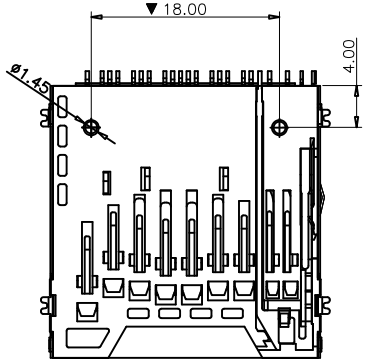

NOTES:

MATERIALS:

HOUSING : ENGINEERING THERMOPLASTIC UL 94V-0. BLACK

CONTACT : COPPER ALLOY

COVER : COPPER ALLOY

FINISH:

CONTACT AREA: GOLD OVER NICKEL.

SOLDER AREA : TIN OVER NICKEL.

PERFORMANCE CHARACTERISTICS:

CURRENT RATING : 0.5 A AC DC

VOLTAGE RATING : 500VAC MIN.

CONTACT RESISTANCE : 100 MILLIOHMS MAX.

INSULATION RESISTANCE : 1000 MEGOHMS MIN . AT 500VDC.

OPERATING TEMPERATUER : -25°C TO 85°C.

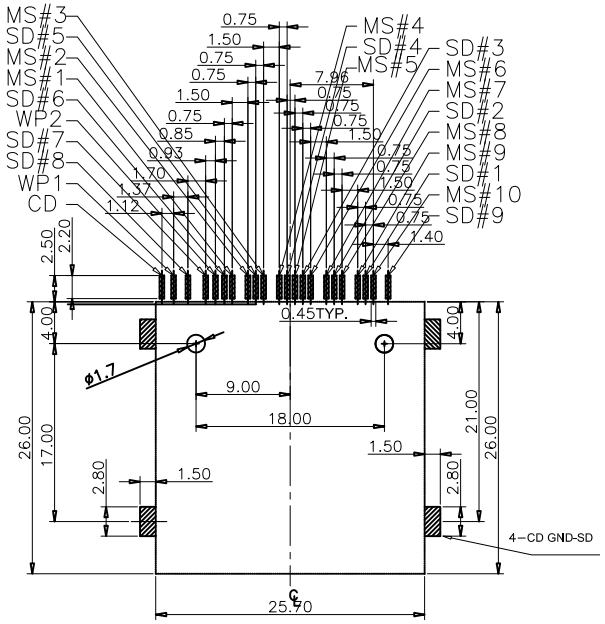

PCB LAYOUT

MS CARD PIN DESIGN	
Pin#	Name
1#	VSS
2#	BS
3#	VCC
4#	DIO
5#	RESERVE
6#	INS
7#	RESERVE
8#	SCLK
9#	VCC
10#	VSS

SD CARD PIN DESIGN		
Pin#	Name	Description
1#	CD/DAT3	Card Detect/DATA 1/0
2#	CMD	COMMAND
3#	Vss1	GROUND
4#	VDD	POWER
5#	CLK	Clock
6#	Vss2	GROUND
7#	DAT0	Data 1/0
8#	DAT1	Data 1/0
9#	DAT2	Data 1/0

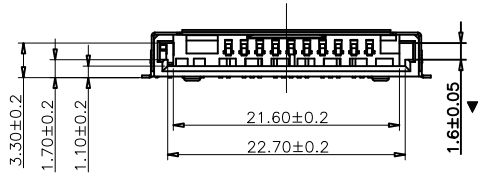

GENERIAL TOLERANCE	
X.± 0.50	X.°± 5 °
.X± 0.30	.X°± 2 °
.XX± 0.20	.XX°± 1 °

KINGCONN 皇海科技股份有限公司

名稱(TITLE) SD MS MMC 3IN1 CARD A TYPE

單位(UNIT)	料號(PART NO.)	圖號(DWG NO.)
mm	7SDMS-F0-0002	7SDMS-F0-0002

審核(APPROVAL)	核對(CHECKED)	製圖(DRAWN)	比例 SCALE 1:1	張數 SHEET 1/1
			專案 PROJ.	更改 REV A

RoHS

QP-701-03-R