更改 REV	說明內容 MODIFICATION
A	ECXXXXX

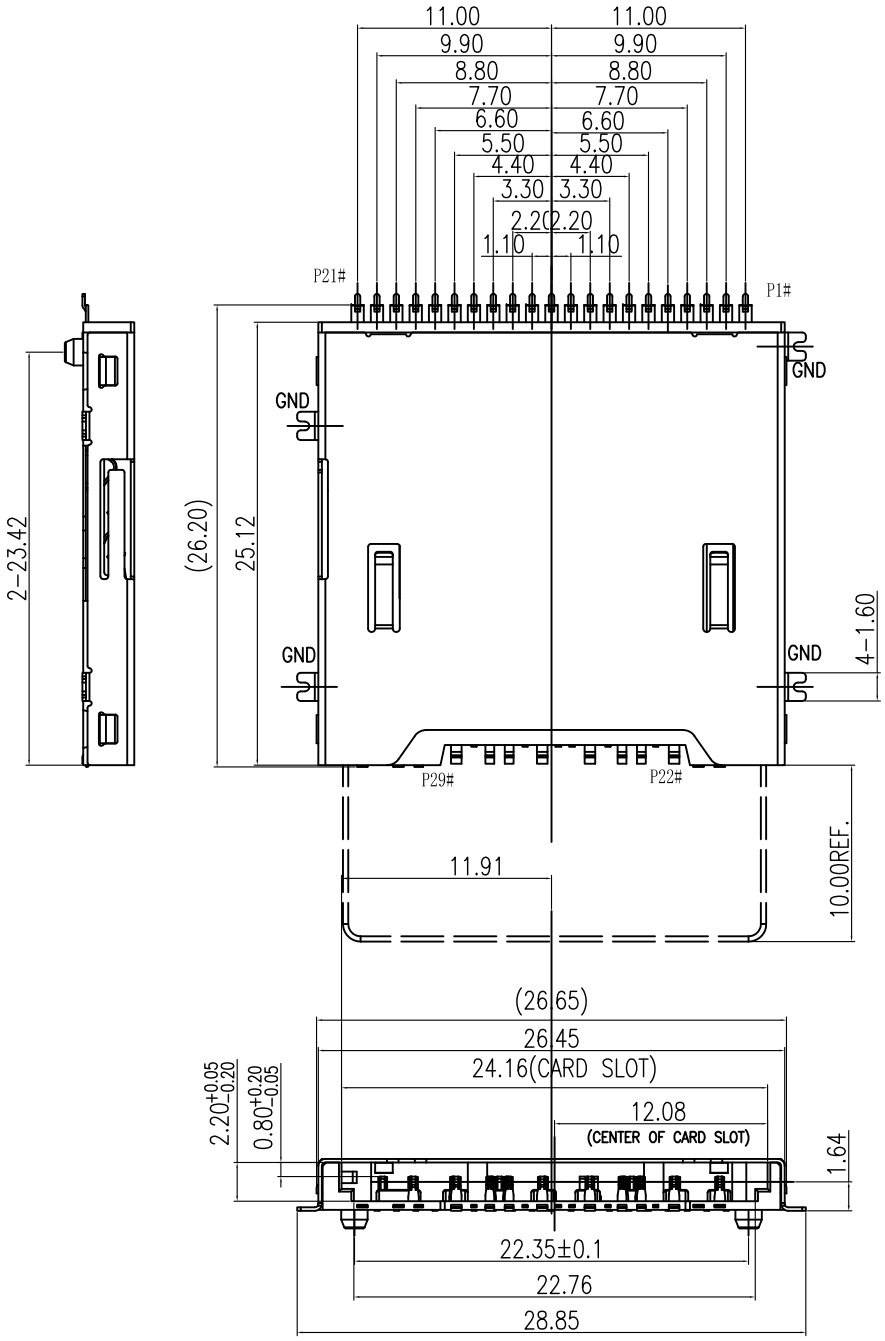

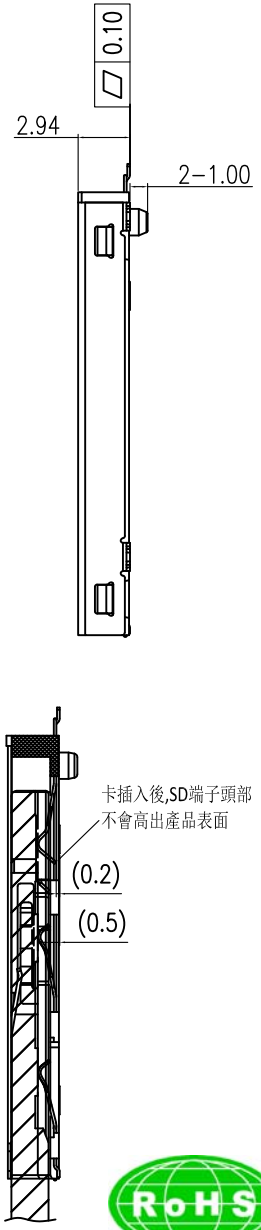

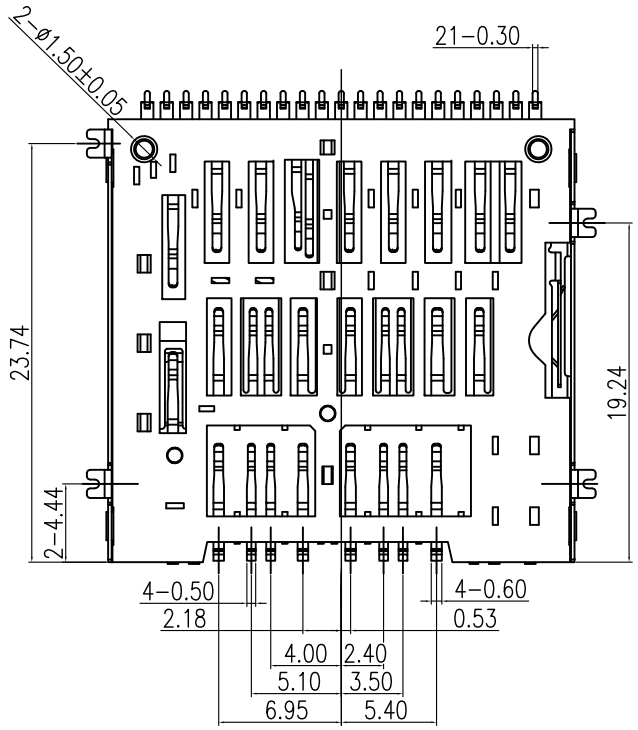

Circuit Diagram for CARD Detect/Write Protect Switch

CARD DETECT	8# 9# CARD OUT	8# 9# CARD INSERT
WRITE PROTECT	21# GND CARD OUT	21# GND WRITE ENABLE

GENERIAL TOLERANCE		KINGCONN 皇海科技股份有限公司
X.± 0.50	X.°± 5 °	
.X± 0.30	.X°± 2 °	名稱(TITLE) SD8.0 30u" NON PUSH H:2.94mm
.XX± 0.20	.XX°± 1 °	
單位(UNIT) mm	料號(PART NO.) 7SD80-F0-0001	圖號(DWG NO.) 7SD80-F0-0001
審核(APPROVAL)	核對(CHECKED)	製圖(DRAWN)
比例 SCALE 1:1	張數 SHEET 1/2	
投影 PROJ.	更改 REV A	

RoHS

QP-701-03-R

更改 REV	說明 MODIFICATION
A	ECXXXXX

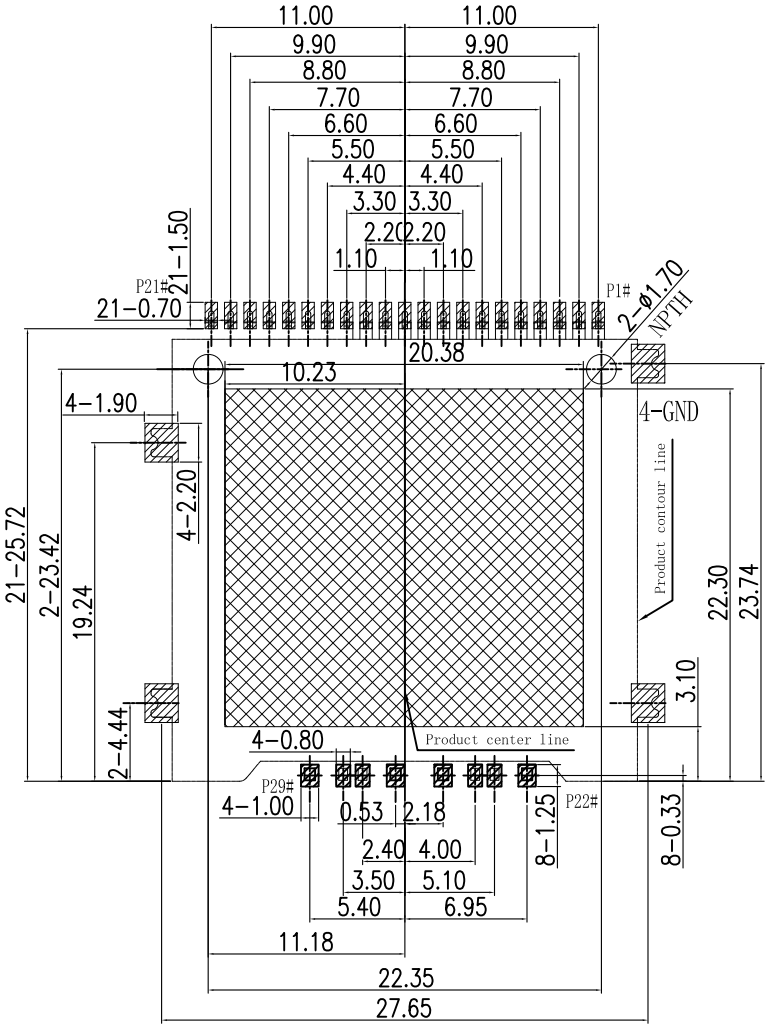

RECOMMEND P.C.B LAYOUT
(General tolerance ±0.05)

PAD AREA
NO COPPER AREA
(NO Trace&Via&GND)

Notes:

1.Material:
Housing: LCP Black.
Terminal: PHOSPHOR BRONZE.
Shell: STAINLESS STEEL.

2.Plating:
Terminal: 30u" Au Plated On Contact Area And G/F Plated On Solder Area.
Sheel: G/F Plated On Solder Area.

3. Operation Voltage: 10V AC.
Current Rating: 1.0A MAX.
Contact Resistance: 100mΩ MAX.
Dielectric withstanding voltage: 500V DC/1minute.
Insulation Resistance: 1000mΩ Minutes. 500V DC.
Operation Temperature: −20℃~+60℃.
Storage Temperature: −20℃~+70℃.
IR Reflow 260℃ 5s.

Pin Assignment

No.	PIN#.	Name	Type	Description
P1	PIN10#	VSS3	S	Supply voltage ground
P2	PIN19#	VDD1a	S	Supply voltage (3.3V)
P3	PIN9#	CLKREQ#	I/O/OD	Reference clock request signal. Also used by L1 PM sub-states
P4	PIN11#	PCIe Tx0+	IDS	Card Input; lane 0
P5	PIN1#	PERST#	I	PE-Reset is a functional reset
P6	PIN12#	PCIe Tx0-	IDS	Card Input; lane 0
P7	PIN2#			Not Used
P8	CD PIN	CD		
P9	PIN3#	VSS1	S	Supply voltage ground
P10	PIN13#	VSS4	S	Supply voltage ground
P11	PIN14#	VDD2	S	Supply voltage (1.8V)
P12	PIN4#	VDD1	S	Supply voltage (3.3V)
P13	PIN15#	PCIe Rx0-	ODS	Card Output; lane 0
P14	PIN5#			Not Used
P15	PIN16#	PCIe Rx0+	ODS	Card Output; lane 0
P16	PIN6#	VSS2	S	Supply voltage ground
P17	PIN17#	VSS5	S	Supply voltage ground
P18	PIN7#	REFCLK+	IDS	PCIe Ref Clock
P19	PIN18#	VDD3	S	Supply voltage (1.2V)
P20	PIN8#	REFCLK-	IDS	PCIe Ref Clock
P21	WP PIN	WP		
P22	PIN20#	VSS6	S	Supply voltage ground
P23	PIN21#	PCIe Tx1+	IDS	Card Input; lane 1
P24	PIN22#	PCIe Tx1-	IDS	Card Input; lane 1
P25	PIN23#	VSS7	S	Supply voltage ground
P26	PIN24#	VDD2a	S	Supply voltage (1.8V)
P27	PIN25#	PCIe Rx1-	ODS	Card Output; lane 1
P28	PIN26#	PCIe Rx1+	ODS	Card Output; lane 1
P29	PIN27#	VSS8	S	Supply voltage ground

GENERIAL TOLERANCE	
X.± 0.50	X.°± 5 °
.X± 0.30	.X°± 2 °
.XX± 0.20	.XX°± 1 °

KINGCONN 皇海科技股份有限公司

名稱(TITLE) SD8.0 30u" NON PUSH H:2.94mm

單位(UNIT)	料號(PART NO.)	圖號(DWG NO.)
mm	7SD80-F0-0001	7SD80-F0-0001

審核(APPROVAL)	核對(CHECKED)	製圖(DRAWN)	比例 SCALE 1:1	張數 SHEET 2/2
			投法 PROJ.	更改 REV A

RoHS

QP-701-03-R