更改 REV	說明內容 MODIFICATION
A	ECXXXXX

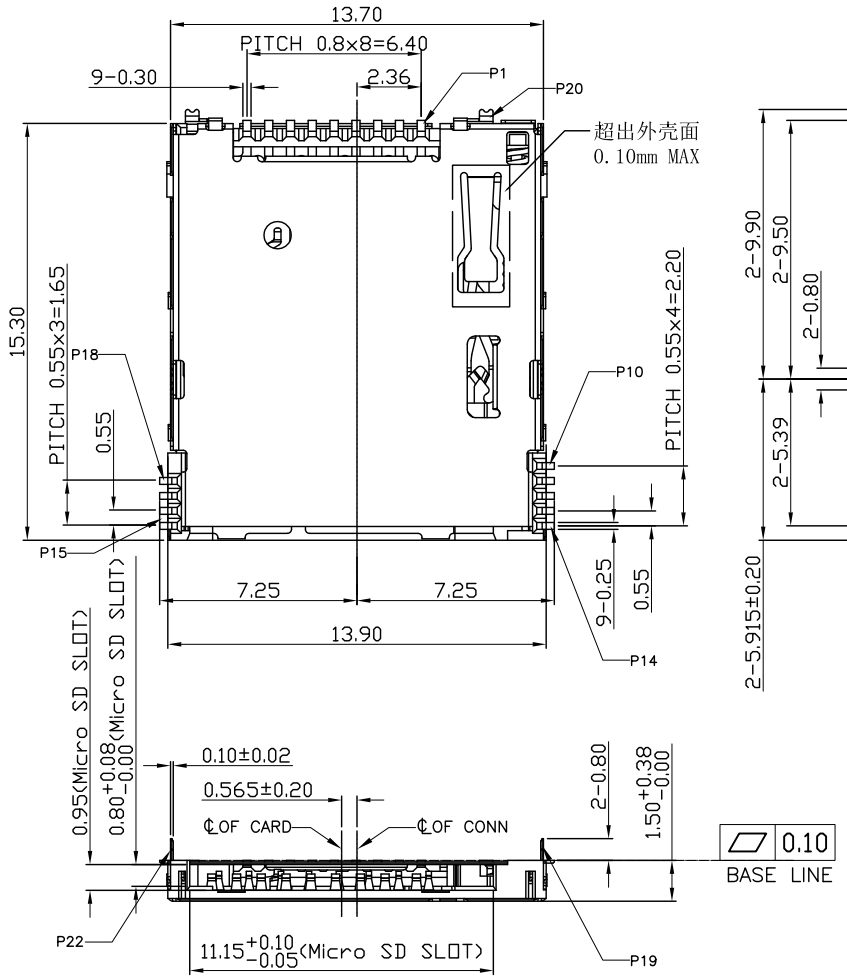

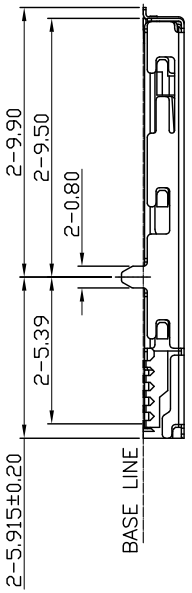

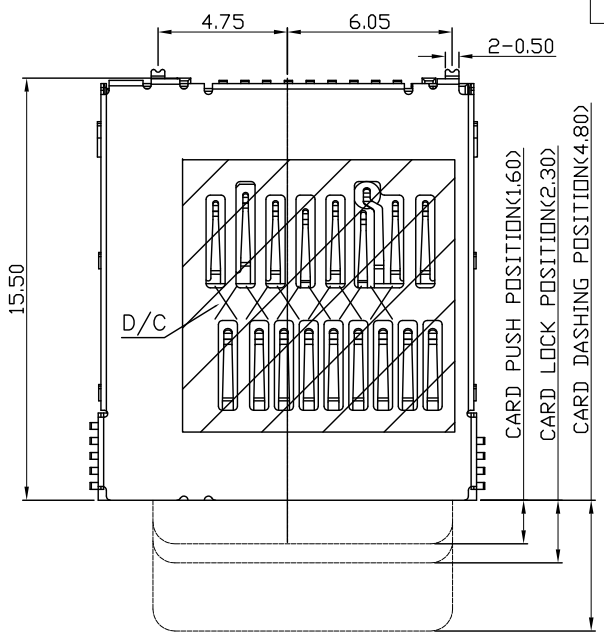

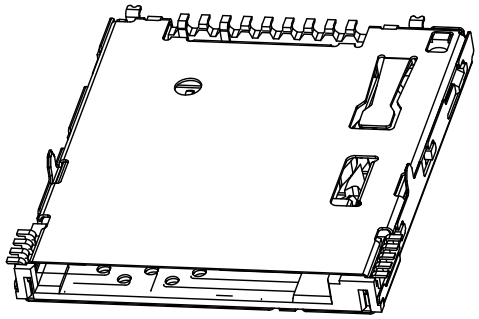

GENERIAL TOLERANCE	
X.± 0.50	X.°± 5 °
.X± 0.30	.X°± 2 °
.XX± 0.20	.XX°± 1 °

KINGCONN 皇海科技股份有限公司

名稱(TITLE): Micro SD 4.0 PUSH REVERSE

單位(UNIT)	料號(PART NO.)	圖號(DWG NO.)
mm	7MSD4-F0-0007	7MSD4-F0-0007

審核(APPROVAL)	核對(CHECKED)	製圖(DRAWN)	比例 SCALE 1:1	張數 SHEET 1/2
			專案 PROJ.	更改 REV A

RoHS

QP-701-03-R

更改 REV	說明 MODIFICATION
A	ECXXXXX

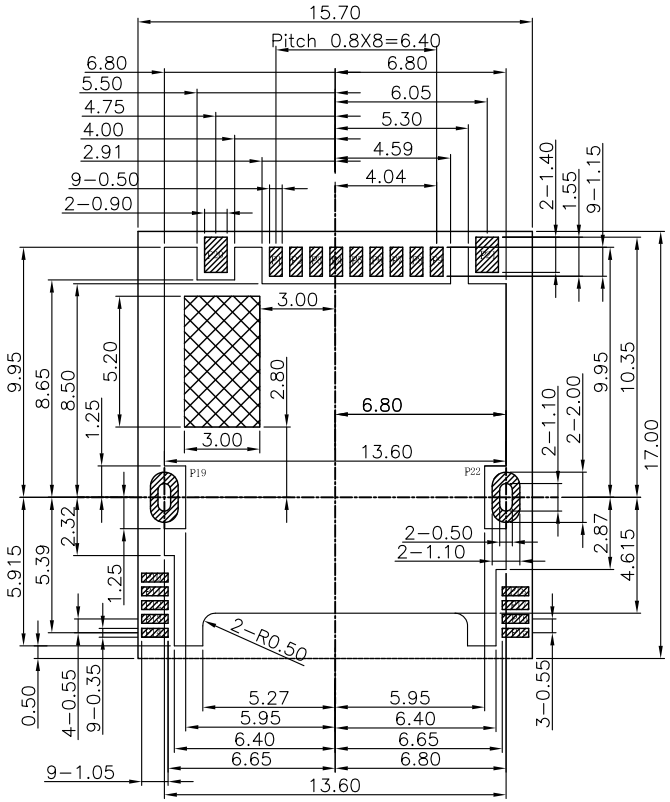

RECOMMENDE P.C.B LAYOUT
TOP VIEW(LOLERANCE +/-0.05)

: PAD AREA

: VIA AND TRACE KEEPOUT AREA

: KEEP OUT AREA

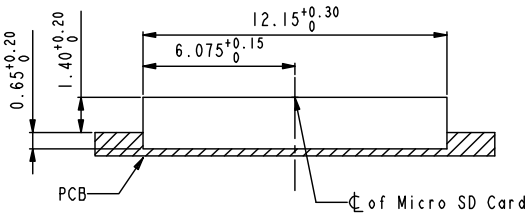

RECOMMEND ID DIMENSION

NOTES :

1. MATERIAL :
   - 1.1 HOUSING:LCP UL94 V-0, BLACK COLOR.
   - 1.2 SHELL: STAINLESS STEEL
   - 1.3 CONTACT: COPPER ALLOY
2. FINISH :
   - 2.1 CONTACT: GOLD PLATING ON CONTACT AREA, MATTE TIN 80u"MIN ON SOLDERTAIL AREA. 50u" MIN NICKEL PLATING OVERALL.
   - 2.2 SHELL: 30u" MIN NICKEL PLATING OVERALL.
3. EIECTRICAL CHARACTERISTICS:
   - 3.1 OPERATING VOLTAGE : 100V AC(rms)/DC.
   - 3.2 CURRENT RATING : 0.5 A.
   - 3.3 OPERATING TEMPERATURE: -25°C~+85°C.
   - 3.4 CONTACT RESISTANCE: 100 m OHMS MAX.
   - 3.5 INSULATION RESISTANCE: 1000M OHMS MIN. AT 250VDC.
   - 3.6 DIELECTRIC WITHSTANDING VOLTAGE:500 VAC/1MINUTE.

PIN ASSIGNMENT

Pin No.	Pin Assignment
P1	MICRO SD DAT2
P2	MICRO SD CD/DAT3
P3	MICRO SD CMD
P4	MICRO SD VDD1
P5	MICRO SD CLK
P6	MICRO SD VSS
P7	MICRO SD DAT0/RCLK+
P8	MICRO SD DAT1/RCLK-
P9	MICRO SD CD
P10	MICRO SD VDD2
P11	MICRO SD SW10
P12	MICRO SD VSS
P13	MICRO SD D0+
P14	MICRO SD D0-
P15	MICRO SD VSS
P16	MICRO SD D1-
P17	MICRO SD D1+
P18	MICRO SD VSS
P19	GND
P20	GND
P21	GND
P22	GND

Opening/Close of Switch

	Card Detect Switch
Card Uninsertion	Open
Card Half Insertion	Open
Card Insertion	Close
N/O 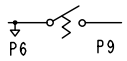	Open 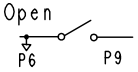 Close 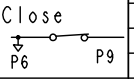

GENERAL TOLERANCE	
X.± 0.50	X.°± 5 °
.X± 0.30	.X°± 2 °
.XX± 0.20	.XX°± 1 °

KINGCONN 皇海科技股份有限公司

名 稱(TITLE) Micro SD 4.0 PUSH REVERSE

單 位(UNIT)	料 號(PART NO.)	圖 號(DWG NO.)
mm	7MSD4-F0-0007	7MSD4-F0-0007

審 核(APPROVAL) 核 對(CHECKED) 製 圖(DRAWN)

比 例 SCALE 1:1 張數 SHEET 2/2

投影 PROJ. 更改 REV A

RoHS

QP-701-03-R